TRU-WELD



STANDARD WELD STUDS

A Division of Tru-Fit Products

460 LAKE RD.
MEDINA, OHIO 44256

PH.(330)725-7741
FAX (330)725-0161

(800) 321-5588

TRU-FIT PRODUCTS • TRU-WELD

QUALITY WELD STUDS, STUD WELDING EQUIPMENT AND FASTENERS SINCE 1928

Atlanta ● Calgary ● Chicago ● Dallas ● Denver ● Houston ● Kansas City ● Medina ● New York City ● Salt Lake City ● Smithville ● Toronto ● Vancouver

Since 1959 Tru-Weld has been an industry leader of weld stud sales and manufacturing. TRU-WELD manufactures weld stud fasteners for a vast variety of applications. From the small everyday handheld tools, yard machinery, etc. to automobiles, aircrafts, bridges, ocean liners, steel structure buildings and military vehicles; weld studs are all around us in our everyday lives.

Stud Welding

Simply stated, the process of "Stud Welding" is the fusing of a threaded or non-threaded metal shaft or stud to a workpiece with a high power electrical detonation - yielding a stronger bond than if it were forged or traditionally welded.

Full Service Manufacturing

With our full in-house manufacturing facility, Heat Treating and Finishing departments, Tru-Weld will design and manufacture a weld stud to suit your specific needs and application.

Service, Quality and Competitive Pricing

The three vital steps that make the business world go around. We believe that with uncompromised service, high quality manufacturing and competitive pricing, TRU-WELD will continue to retain our current and gain new customers around the world. Please contact us to see if we can add you as another satisfied customer.

Experience

Since 1928 TFP Corp. has been manufacturing Cold-Formed Fasteners. And now 65 years later - since 1959 Tru-Weld has maintained industry leadership in weld stud sales, manufacturing and equipment.

Our experienced Management and Staff is committed to provide the utmost in quality and service in every step of our production, while remaining competitive in the marketplace. It is our goal to meet our customer's needs more effectively than our competitors through a process of continuous quality improvement. Our long-standing relationship with our customers and suppliers is our key to continued success and growth. If we can be of any further assistance to you and your company, please do not hesitate to contact us.

Tru-Fit Products • Tru-Weld

Quality weld studs, stud welding equipment and fasteners since 1928

Atlanta • Calgary • Chicago • Dallas • Denver • Houston • Kansas City • Medina • New York City • Salt Lake City • Smithville • Toronto • Vancouver

Table of Contents

Part Number Explanation	1
Transposition Chart	2
1/4" - 5/8" Headed Concrete Anchors	3-6
3/4" Shear & Thru-Deck Anchors	7-8
7/8"-1" Shear Connectors	9-10
3/8"-3/4" Deformed Bar Anchors	11-14
A706 Stud Weldable Rebar	15
Punching Shear Resistors	16
No Thread Studs	17
Full Thread Studs	18
Partial Thread Studs	19
Reduced Weld Base Studs	20
Collar Studs	21
CD Material Capabilities	22
CD Studs	23-24
Standard Ferrules	25-26
Shipping Weights	27-29
Weld Gun Info	30
Stud Welding Process	31
Stud Welding Guidelines	32-33
Benefits of Stainless Steel Studs	34

TRU-FIT PRODUCTS • TRU-WELD

QUALITY WELD STUDS, STUD WELDING EQUIPMENT AND FASTENERS SINCE 1928

Atlanta • Calgary • Chicago • Dallas • Denver • Houston • Kansas City • Medina • New York City • Salt Lake City • Smithville • Toronto • Vancouver

TRU-WELD STUD PART NUMBERS

CA08-098-11- [XX-XXX-X]

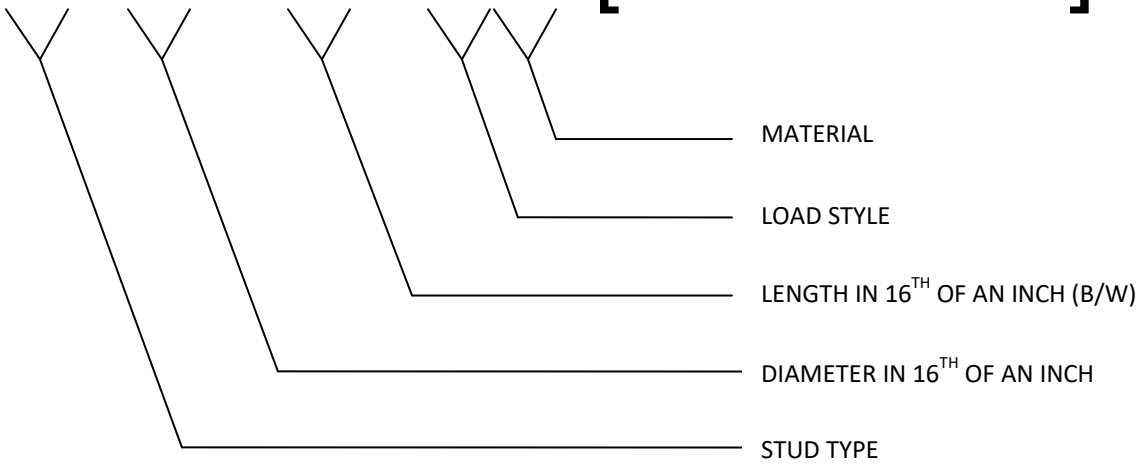

EXAMPLE (FROM ABOVE)
STUD TYPE – CONCRETE ANCHOR
DIAMETER – 1/2" (IN SIXTEENTH)
BEFORE WELD LENGTH – 6-1/8" (IN SIXTEENTH)
LOAD STYLE – BALL LOAD
MATERIAL – MILD STEEL (C1015)

STUD TYPE		LOAD STYLE		MATERIAL	
CODE	TYPE	CODE	TYPE	CODE	TYPE
CA	CONCRETE ANCHOR	0	NO LOAD	1	1010 thru 1020
CD	CAPACITOR DISCHARGE	1	BALL LOAD	2	302SS
CS	COLLAR STUDS			3	ALUMINUM
DBA	DEFORMED BAR ANCHOR			4	304SS
DSC	DECKING SHEAR CONNECTOR			6	316SS
FER	FERRULE			8	1018
IT	INTERNALLY TAPPED				
NT	NO THREAD				
PSR	PUNCHING SHEAR RESISTOR				
SC	SHEAR CONNECTOR				
TP	PARTIAL THREAD				
TR	THREADED-REDUCED WELD BASE				
TT	FULL THREAD				

PART NUMBER EXTENSIONS [XX-XXX-X] ARE RESERVED FOR STUDS THAT HAVE THREADED EXTENSIONS. APPLIES TO COLLAR STUDS, IT STUDS, SHOULDER STUDS, AND STACK STUDS.

LONE CHARACTER ON END DESIGNATES SPECIAL MARKING ON HEAD OR SPECIAL PACKAGING (I.E. IN CANS).

"C" OR "F" ON END OF THREADED STUDS DESIGNATES UNC (COURSE) OR UNF (FINE) THREAD.

TRANSPOSITION CHART

STUD DESCRIPTION	TRU-WELD TYPE	NELSON TYPE
CONCRETE ANCHOR	CA	H4L
SHEAR CONNECTOR	SC	S3L
THRU-DECK SHEAR CONNECTOR	DSC	S3L
DEFORMED BAR ANCHOR	DBA	D2L
STUD WELDABLE REBAR (A706)	SWR	D6L
PSR STUDS	PSR	PSRS
THREADED	TP	CPL
FULLY THREADED	TT	CFL
COLLAR STUDS	CS	CKL
NO THREAD	NT	NBL
INTERNALLY TAPPED	IT	TBL
THREADED (REDUCED WELD BASE)	TR	CDL
CAPACITOR DISCHARGE	CD	ATA ATC ATS

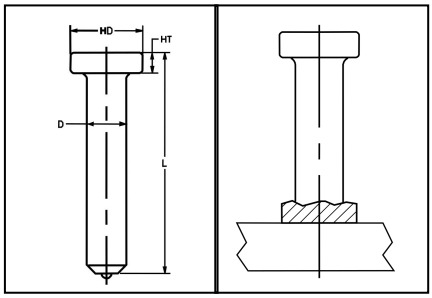

HEADED CONCRETE ANCHOR – FULL WELD BASE

TYPE **CA** STUD

TYPE F FERRULE SUPPLIED

Head Diameter (HD) – 1/2" for all 1/4" Headed Concrete Anchor
Head Height (HT) – 3/16" for all 1/4" Headed Concrete Anchor

WELD STUD SPECIFICATIONS			WELD STUD PACKAGING			WELD STUD WEIGHTS		
D Diameter	**L** Length	**TRU-WELD** Part Number	**Pieces Per Box**	**Boxes Per Pallet**	**Pieces Per Pallet**	**Box Weight**	**Pallet Weight**	**1,000 Piece Weight**
1/4	1-1/8	CA04 0 - 18-11	2,000	27	54,000	47 lbs.	1,269 lbs	22 lbs.
1/4	2-11/1	CA04 0 - 43-11	1,000	27	27,000	43 lbs.	1,161 lbs	43 lbs.
1/4	3-1/8	CA04 0 - 50-11	1,000	27	27,000	49 lbs.	1,323 lbs	49 lbs.
1/4	4-1/8	CA04 0 - 66-11	600	27	16,200	38 lbs.	1,026 lbs	63 lbs.

Concrete Anchors are used in all types of concrete connections. They can be welded to a flat surface, or to the inside or outside of an angle.
Length: Length is listed before weld. Stud diameters 1/4"will be approx. 1/8"shorter after welding. TRU-WELD concrete anchors can be made in any length above the standard minimum.
Material: Low carbon steel, ASTM A29/ A108, 1010-1020. CA Studs are also available in weldable stainless steel. Type 302 is the most commonly used. Other grades of stainless steel(except Type 303) are available when required.

Tru-Weld shear connectors (Headed Stud Anchors) are manufactured to comply with one or more of the following specifications: AWS D1.1, AWS D1.6, AASHTO, ISO-13918, ASTM A108/A29, CSA W59-18 APPENDIX H AND CSA S6-19 CLAUSE 10.4.7

Mechanical Property Requirements	
Tensile Strength	65,000 psi Min
Yield Stregth	51,000 psi Min
Elongation (% in 2 in.)	20% min.
Elongation (% in 5x dia.)	15% min.
Reduction of Area	50% min.

CHUCK PART #	FOOT PART #	GRIP PART #	FERRULE FOOT PLATE (DUAL LEG)
CN-050	B-1C	GC-025 (Standard Duty)	QN-025 (Standard Duty)
	B-1C	GC-037 (Heavy Duty)	QN-037 (Heavy Duty)

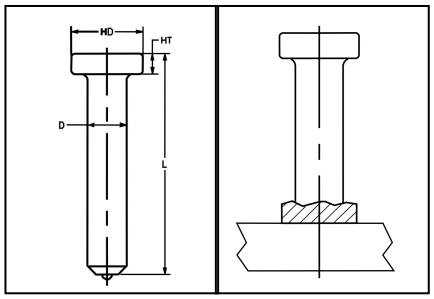

HEADED CONCRETE ANCHOR – FULL WELD BASE

TYPE **CA** STUD

TYPE F FERRULE SUPPLIED

Diameter (HD) – 3/4" for all 3/8" Headed Concrete Anchors
Head Height (HT) – 9/32" for all 3/8" Headed Concrete Anchors

WELD STUD SPECIFICATIONS			WELD STUD PACKAGING			WELD STUD WEIGHTS		
D Diamete	**L** Length	**TRU-WELD** Part Number	**Pieces Per Box**	**Boxes Per Pallet**	**Pieces Per Pallet**	**Box Weight**	**Pallet Weight**	**1,000 Piece Weight**
3/8	1-3/8	CA06 - 022- 11	1,000	27	27,000	70 lbs.	1,890 lbs	70 lbs.
3/8	1-5/8	CA06 - 026 - 11	1,000	27	27,000	79 lbs.	2,133 lbs	79 lbs.
3/8	2-1/8	CA06 - 034 - 11	700	27	18,900	65 lbs.	1,758 lbs	93 lbs.
3/8	2-5/8	CA06 - 042 - 11	600	27	16,200	64 lbs.	1,728 lbs	108 lbs.
3/8	3-1/8	CA06 - 050 - 11	500	27	13,500	62 lbs.	1,674 lbs	124 lbs.
3/8	4-1/8	CA06 - 066 - 11	350	27	9,450	54 lbs.	1,458 lbs	154 lbs.
3/8	5-1/8	CA06 - 082 - 11	300	27	8,100	55 lbs.	1,485 lbs	183 lbs.
3/8	6-1/8	CA06 - 098 - 11	200	27	5,400	43 lbs.	1,161 lbs	215 lbs.
3/8	8-1/8	CA06 - 130 - 11	125	27	3,375	35 lbs.	945 lbs.	280 lbs.

Concrete Anchors are used in all types of concrete connections. They can be welded to a flat surface, or to the inside or outside of an angle.
Length: Length is listed before weld. Stud diameters 1/4"will be approx. 1/8"shorter after welding.
TRU-WELD concrete anchors can be made in any length above the standard minimum.
Material: Low carbon steel, ASTM A29/ A108, 1010-1020. CA Studs are also available in weldable
stainless steel. Type 302 is the most commonly used.

Tru-Weld shear connectors (Headed Stud Anchors) are manufactured to comply with one or more of the following specifications: AWS D1.1, AWS D1.5, AWS D1.6, AASHTO, ISO-13918, ASTM A108/A29, CSA W59-18 APPENDIX H AND CSA S6-19 CLAUSE 10.4.7

CHUCK PART #	FOOT PART #	GRIP PART #	FERRULE FOOT PLATE (DUAL LEG)
CH-037-S CH-037-T	B-1C	GC-037 (Standard Duty)	QN-037 (Standard Duty)
	B-1C	GC-050 (Heavy Duty)	QN-050 (Heavy Duty)

Mechanical Property Requirements	
Tensile Strength	65,000 psi min.
Yield Strength	51,000 psi min.
Elongation (% in 2 in.)	20% min.
Elongation (% in 5x dia.)	15% min.
Reduction of Area	50% min.

Type B Studs are headed, bent, or of other configuration tha
are used as an essential component in composite beam desig
and construction.

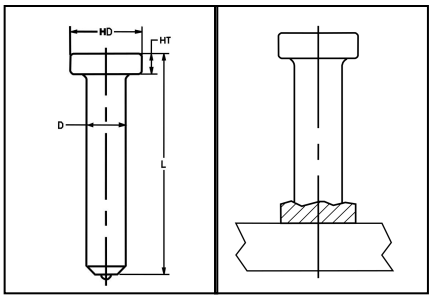

HEADED CONCRETE ANCHOR – FULL WELD BASE

TYPE **CA** STUD

TYPE F FERRULE SUPPLIED

Head Diameter (HD) – 1" for all 1/2" Headed Concrete Anchors
Head Height (HT) – 5/16" for all 1/2" Headed Concrete Anchors

WELD STUD SPECIFICATIONS			WELD STUD PACKAGING			WELD STUD WEIGHTS		
D Diameter	**L** Length	**TRU-WELD** Part Number	**Pieces Per Box**	**Boxes Per Pallet**	**Pieces Per Pallet**	**Box Weight**	**Pallet Weight**	**1,000 Piece Weight**
1/2	1-1/8	CA08-018-11	600	27	16,200	68 lbs.	1,836 lbs.	112 lbs.
1/2	1-1/2	CA08-024-11	500	27	13,500	68 lbs.	1,836 lbs.	132 lbs.
1/2	1-5/8	CA08-026-11	450	27	12,150	63 lbs.	1,701 lbs.	140 lbs.
1/2	2-1/8	CA08-034-11	400	27	10,800	67 lbs.	1,809 lbs.	167 lbs.
1/2	2-5/8	CA08-042-11	350	27	9,450	68 lbs.	1,836 lbs.	194 lbs.
1/2	3-1/8	CA08-050-11	300	27	8,100	68 lbs.	1,836 lbs.	227 lbs.
1/2	4-1/8	CA08-066-11	200	27	5,400	56 lbs.	1,512 lbs.	280 lbs.
1/2	5-5/16	CA08-085-11	150	27	4,050	52 lbs.	1,404 lbs.	347 lbs.
1/2	6-1/8	CA08-098-11	125	27	3,375	50 lbs.	1,350 lbs.	400 lbs.
1/2	8-1/8	CA08-130-11	80	27	2,160	40 lbs.	1,080 lbs.	500 lbs.
1/2	10-1/8	CA08-162-11	150	9	1,350	91 lbs.	819 lbs.	606 lbs.
1/2	12-1/8	CA08-194-11	1,500	1	1,500	1,059 lbs.	1,059 lbs.	706 lbs.

Concrete Anchors are used in all types of concrete connections. They can be welded to a flat surface, or to the inside or outside of an angle.
Length: Length is listed before weld. Stud diameters 1/2" will be approx. 1/8" shorter after welding. TRU-WELD concrete anchors can be made in any length above the standard minimum.
Material: Low carbon steel, ASTM A29 / A108, 1010-1020. CA Studs are also available in weldable stainless steel. Type 302 is the most commonly used.

Tru-Weld shear connectors (Headed Stud Anchors) are manufactured to comply with one or more of the following specifications: AWS D1.1, AWS D1.5, AWS D1.6, AASHTO, ISO-13918, ASTM A108/A29, CSA W59-18 APPENDIX H AND CSA S6-19 CLAUSE 10.4.7 For more detailed information see: ICC-ES Evaluation Report ESR-2577

CHUCK PART #	FOOT PART #	GRIP PART #	FERRULE FOOT PLATE (DUAL LEG)
CH-050 CH-050-T	B-1C	GC-050 (STANDARD DUTY)	QN-050 (STANDARD DUTY)
	B-2C	GC-062 (HEAVY DUTY)	QN-062 (HEAVY DUTY)

Mechanical Property Requirements	
Tensile Strength	65,000 psi min.
Yield Strength	51,000 psi min.
Elongation (% in 2 in.)	20% min.
Elongation (% in 5x dia.)	15% min.
Reduction of Area	50% min.

Type B Studs are headed, bent, or of other configuration that are used as an essential component in composite beam design and construction.

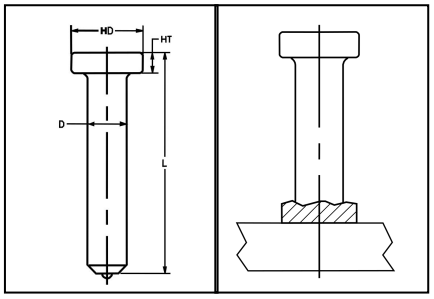

HEADED CONCRETE ANCHOR – FULL WELD BASE

TYPE **CA** STUD

TYPE F FERRULE SUPPLIED

Head Diameter (HD) – 1-1/4" for all 5/8" Headed Concrete Anchors
Head Height (HT) – 5/16" for all 5/8" Headed Concrete Anchors

WELD STUD SPECIFICATIONS			WELD STUD PACKAGING			WELD STUD WEIGHTS		
D Diameter	**L** Length	**TRU-WELD** Part Number	**Pieces Per Box**	**Boxes Per Pallet**	**Pieces Per Pallet**	**Box Weight**	**Pallet Weight**	**1,000 Piece Weight**
5/8	1-7/16	CA10-023-11	400	27	10,800	81 lbs.	2,187 lbs.	203 lbs.
5/8	1-11/16	CA10-027-11	325	27	8,775	77 lbs.	2,079 lbs.	237 lbs.
5/8	2-1/8	CA10-034-11	250	27	6,750	68 lbs.	1,836 lbs.	264 lbs.
5/8	2-3/16	CA10-035-11	250	27	6,750	71 lbs.	1,917 lbs.	284 lbs.
5/8	2-11/16	CA10-043-11	250	27	6,750	77 lbs.	2,079 lbs.	308 lbs.
5/8	3-3/16	CA10-051-11	200	27	5,400	70 lbs.	1,890 lbs.	350 lbs.
5/8	3-11/16	CA10-059-11	150	27	4,050	60 lbs.	1,620 lbs.	400 lbs.
5/8	4-3/16	CA10-067-11	150	27	4,050	66 lbs.	1,782 lbs.	440 lbs.
5/8	4-11/16	CA10-075-11	125	27	3,375	60 lbs.	1,620 lbs.	480 lbs.

Concrete Anchors are used in all types of concrete connections. They can be welded to a flat surface, or to the inside or outside of an angle.
Length: Length is listed before weld. Stud diameters 5/8" will be approx. 3/16" shorter after welding. TRU-WELD concrete anchors can be made in any length above the standard minimum.
Material: Low carbon steel, ASTM A29 / A108, 1010-1020. CA Studs are also available in weldable stainless steel. Type 302 is the most commonly used.

Tru-Weld shear connectors (Headed Stud Anchors) are manufactured to comply with one or more of the following specifications: AWS D1.1, AWS D1.5, AWS D1.6, AASHTO, ISO-13918, ASTM A108/A29, CSA W59-18 APPENDIX H AND CSA S6-19 CLAUSE 10.4.7 For more detailed information see: ICC-ES Evaluation Report ESR-2577

CHUCK PART #	FOOT PART #	GRIP PART #	FERRULE FOOT PLATE (DUAL LEG)
CH-075	B-2C	GC-062 (STANDARD DUTY)	QN-062 (STANDARD DUTY)
	B-2C	GC-075 (HEAVY DUTY)	QN-075 (HEAVY DUTY)

Mechanical Property Requirements	
Tensile Strength	65,000 psi min.
Yield Strength	51,000 psi min.
Elongation (% in 2 in.)	20% min.
Elongation (% in 5x dia.)	15% min.
Reduction of Area	50% min.

Type B Studs are headed, bent, or of other configuration that are used as an essential component in composite beam design and construction.

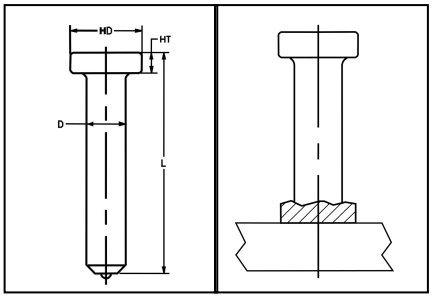

Thru-Deck & Shear Connector - Full Weld Base

TYPE **SC** & **DSC** STUD

TYPE F FERRULE SUPPIED (SC)

TYPE TD FERRULE SUPPLIED (DSC)

Head Diameter (HD) – 1-1/4" for all 3/4 Headed Shear & Thru-Deck Connectors

Head Height (HT) – 3/8" for all 3/4 Headed Shear & Thru-Deck Connectors

WELD STUD SPECIFICATIONS			WELD STUD PACKAGING			WELD STUD WEIGHTS		
D Diameter	**L** Length	**TRU-WELD** Part Number	**Pieces Per Box**	**Boxes Per Pallet**	**Pieces Per Pallet**	**Box Weight**	**Pallet Weight**	**1,000 Piece Weight**
3/4	2.2	SC12-036-11	200	48	9,600	71 lbs.	3,408 lbs.	355 lbs.
3/4	3-3/16	SC12-051-11	125	48	6,000	60 lbs.	2,880 lbs.	480 lbs.
3/4	3/8	DSC12-054-11	125	48	6,000	63 lbs.	3,024 lbs.	504 lbs.
3/4	3-11/16	SC12-059-11	100	48	4,800	54 lbs.	2,592 lbs.	540 lbs.
3/4	3-7/8	DSC12-062-11	100	48	4,800	57 lbs.	2,736 lbs.	570 lbs.
3/4	4-3/16	SC12-067-11	100	48	4,800	60 lbs.	2,880 lbs.	600 lbs.
3/4	4-3/8	DSC12-070-11	100	48	4,800	62 lbs.	2,976 lbs.	620 lbs.
3/4	4-11/16	SC12-075-11	75	48	3,600	50 lbs.	2,400 lbs.	667 lbs.
3/4	4-7/8	DSC12-078-11	75	48	3,600	52 lbs.	2,496 lbs.	693 lbs.
3/4	5-3/16	SC12-083-11	60	48	2,880	44 lbs.	2,112 lbs.	734 lbs.
3/4	5-3/8	DSC12-086-11	60	48	2,880	45 lbs.	2,160 lbs.	750 lbs.
3/4	5-11/16	SC12-091-11	60	48	2,880	48 lbs.	2,304 lbs.	800 lbs.
3/4	5-7/8	DSC12-094-11	60	48	2,880	49 lbs.	2,352 lbs.	817 lbs.
3/4	6-3/16	SC12-099-11	60	48	2,880	51 lbs.	2,448 lbs.	850 lbs.
3/4	6-3/8	DSC12-102-11	60	48	2,880	53 lbs.	2,544 lbs.	884 lbs.
3/4	6-11/16	SC12-107-11	70	27	1,890	64 lbs.	1,728 lbs.	914 lbs.
3/4	7-3/16	SC12-115-11	60	27	1,620	59 lbs.	1,593 lbs.	983 lbs.
3/4	8-3/16	SC12-131-11	50	27	1,350	54 lbs.	1,458 lbs.	1,080 lbs.
3/4	9-3/16	SC12-147-11	100	9	900	123lbs.	1,107 lbs.	1,230 lbs.
3/4	10-3/16	SC12-163-11	100	9	900	137lbs.	1,233 lbs.	1,370 lbs.
3/4	12-3/16	SC12-195-11	1,000	1	1,000	1,590 lbs.	1,590 lbs.	1,590 lbs.
3/4	16-3/16	SC12-259-11	700	1	700	1,457 lbs.	1,457 lbs.	2,081 lbs.

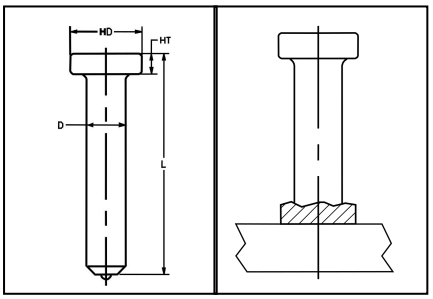

Thru-Deck & Shear Connector - Full Weld Base

TYPE **SC** & **DSC** STUD
TYPE F FERRULE SUPPIED (SC)
TYPE TD FERRULE SUPPLIED (DSC)

Head Diameter (HD) – 1-1/4" for all 3/4 Headed Shear & Thru-Deck Connectors

Head Height (HT) – 3/8" for all 3/4 Headed Shear & Thru-Deck Connectors

Thru-Deck & Shear Connectors are used in all types of concrete connections. They can be welded to a flat surface, or to the inside or outside of an angle.

Length: Length is listed before weld. Stud diameters 3/4"will be approx. 3/16"shorter after weld. Thru-Deck stud diameters 3/4" will be approx. 3/8" shorter after weld. TRU-WELD shear connectors can be made in any length above the standard minimum.

Material: Low carbon steel, ASTM A29/ A108, 1010-1020.SC Studs are also available in weldable stainless steel. Type 302 is the most commonly used.

Tru-Weld shear connectors (Headed Stud Anchors) are manufactured to comply with one or more of the following specifications: AWS D1.1, AWS D1.5, AWS D1.6, AASHTO, ISO-13918, ASTM A108/A29, CSA W59-18 APPENDIX H AND CSA S6-19 CLAUSE 10.4.7 For more detailed information see: ICC-ES Evaluation Report ESR-2577

Type B Studs are headed, bent, or of other configuration that used as an essential component in composite beam design and construction.

Mechanical Property Requirements	
Tensile Strength	65,000 psi min.
Yield Strength	51,000 psi min.
Elongation (% in 2 in.)	20% min.
Elongation (% in 5x dia.)	15% min.
Reduction of Area	50% min.

Ferrule	Chuck PART #	Foot PART #	Grip PART #	FERRULE FOOT PLATE (DUAL LEG)
Flat	CH-075	B-2C	GC-075	QN-075
Thru-Deck	CH-075	B-0021-A	B-0021-P	B-0060-1

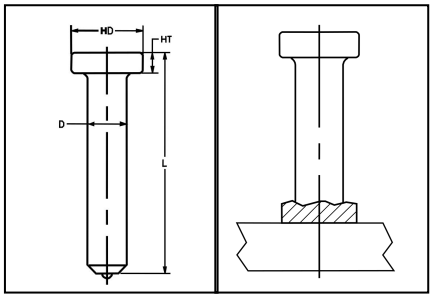

SHEAR CONNECTOR – FULL WELD BASE

TYPE **SC** STUD

TYPE F FERRULE SUPPLIED

Head Diameter (HD) – 1-3/8" for all 7/8" Shear Connectors
Head Height (HT) – 3/8" for all 7/8" Shear Connectors

WELD STUD SPECIFICATIONS			WELD STUD PACKAGING			WELD STUD WEIGHTS		
D Diameter	**L** Length	**TRU-WELD** Part Number	**Pieces Per Box**	**Boxes Per Pallet**	**Pieces Per Pallet**	**Box Weight**	**Pallet Weight**	**1,000 Piece Weight**
7/8	3-3/16	SC14-051-11	100	27	2,700	66 lbs.	1,782 lbs.	631 lbs.
7/8	3-11/16	SC14-059-11	100	27	2,700	74 lbs.	1,998 lbs.	709 lbs.
7/8	4-3/16	SC14-067-11	75	27	2,025	60 lbs.	1,620 lbs.	796 lbs.
7/8	5-3/16	SC14-083-11	60	27	1,620	60 lbs.	1,620 lbs.	962 lbs.
7/8	6-3/16	SC14-099-11	50	27	1,350	58 lbs.	1,566 lbs.	1,137 lbs.
7/8	7-3/16	SC14-115-11	45	27	1,215	59 lbs.	1,593 lbs.	1,306 lbs.
7/8	8-3/16	SC14-131-11	40	27	1,080	59 lbs.	1,593 lbs.	1,496 lbs.
7/8	9-3/16	SC14-147-11	1,400	1	1,400	2,334 lbs.	2,334 lbs.	1,667 lbs.
7/8	10-3/16	SC14-163-11	1,000	1	1,000	1,800 lbs.	1,800 lbs.	1,800 lbs.
7/8	12-3/16	SC14-195-11	800	1	800	1,702 lbs.	1,702 lbs.	2,173 lbs.

Shear Connectors are used in all types of concrete connections. They can be welded to a flat surface, or to the inside or outside of an angle.
Length: Length is listed before weld. Stud diameters 7/8" will be approx. 3/16"shorter after weld.
TRU-WELD shear connectors can be made in any length above the standard minimum.
Material: Low carbon steel, (ASTM A108 / A29, AASHTO M169) 1010-1020. SC Studs are also available in weldable stainless steel. Type 302 is the most commonly used.

Tru-Weld shear connectors are manufactured to conform to: AWS D1.1, AWS D1.5, AWS D1.6, AASHTO, ISO-13918, CSA W59-2013.
See Also: ICC-ES Evaluation Report ESR-2577

Mechanical Property Requirements	
Tensile Strength	65,000 psi min.
Yield Strength	51,000 psi min.
Elongation (% in 2 in.)	20% min.
Elongation (% in 5x d ia	15% min.
Reduction of Area	50% min.

CHUCK PART #	FOOT PART #	GRIP PART #	FERRULE FOOT PLATE (DUAL LEG)
CH-087	B-3C	GC-087	QN-087

Type B Studs are headed, bent, or of other configuration that are used as an essential component in composite beam design and construction.

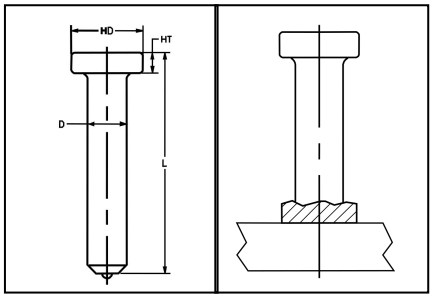

SHEAR CONNECTOR – FULL WELD BASE

TYPE **SC** STUD

TYPE F FERRULE SUPPLIED

Head Diameter (HD) – 1-5/8" for all 1" Shear Connectors
Head Height (HT) – 1/2" for all 1" Shear Connectors

WELD STUD SPECIFICATIONS			WELD STUD PACKAGING			WELD STUD WEIGHTS		
D Diameter	**L** Length	**TRU-WELD** Part Number	**Pieces Per Box**	**Boxes Per Pallet**	**Pieces Per Pallet**	**Box Weight**	**Pallet Weight**	**1,000 Piece Weight**
1"	3-1/4	SC16-052-11	75	27	2,025	70 lbs.	1,809 lbs.	894 lbs.
1"	4-1/4	SC16-068-11	50	27	1,350	57 lbs.	1,539 lbs.	1,140 lbs.
1"	5-1/4	SC16-084-11	50	27	1,350	67 lbs.	1,809 lbs.	1,340 lbs.
1"	6-1/4	SC16-100-11	40	27	1,080	63 lbs.	1,701lbs.	1,575 lbs.
1"	7-1/4	SC16-116-11	40	27	1,080	72 lbs.	1,944 lbs.	1,800 lbs.
1"	8-1/4	SC16-132-11	85	9	765	171 lbs.	1,539 lbs.	2,012 lbs.
1"	9-1/4	SC16-148-11	50	9	450	112 lbs.	1,008 lbs.	2,240 lbs.

Shear Connectors are used in all types of concrete connections. They can be welded to a flat surface, or to the inside or outside of an angle.

Length: Length is listed before weld. Stud diameters 1" will be approx. 1/4" shorter after weld.
TRU-WELD shear connectors can be made in any length above the standard minimum.

Material: Low carbon steel, ASTM A29 / A108, 1010-1020. SC Studs are also available in weldable stainless steel. Type 302 is the most commonly used.

Tru-Weld shear connectors (Headed Stud Anchors) are manufactured to comply with one or more of the following specifications: AWS D1.1, AWS D1.5, AWS D1.6, AASHTO, ISO-13918, ASTM A108/A29, CSA W59-18 APPENDIX H AND CSA S6-19 CLAUSE 10.4.7 For more detailed information see: ICC-ES Evaluation Report ESR-2577

Mechanical Property Requirements	
Tensile Strength	65,000 psi min.
Yield Strength	51,000 psi min.
Elongation (% in 2 in.)	20% min.
Elongation (% in 5x dia.)	15% min.
Reduction of Area	50% min.

CHUCK PART #	FOOT PART #	GRIP PART #	FERRULE FOOT PLATE (DUAL LEG)
CH-100	B-3C	GC-100	QN-100

Type B Studs are headed, bent, or of other configuration that are used as an essential component in composite beam design and construction.

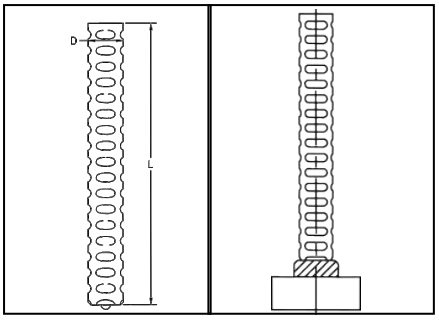

DEFORMED BAR ANCHORS

TYPE DBA STUD

NO THREAD – FULL WELD BASE

TYPE F FERRULE SUPPLIED

WELD STUD SPECIFICATIONS			WELD STUD PACKAGING			WELD STUD WEIGHTS		
D Diameter	**L** Length	**TRU-WELD** Part Number	**Pieces Per Box**	**Boxes Per Pallet**	**Pieces Per Pallet**	**Box Weight**	**Pallet Weight**	**1,000 Piece Weight**
3/8	10-1/8	DBA06-162-18	150	18	2,700	46 lbs.	828 lbs.	288 lbs.
3/8	12-1/8	DBA06-194-18	150	18	2,700	55 lbs.	990 lbs.	345 lbs.
3/8	18-1/8	DBA06-290-18	150	12	1,800	80 lbs.	960 lbs.	515 lbs.
3/8	24-1/8	DBA06-386-18	150	8	1,200	108 lbs.	864 lbs.	685 lbs.
3/8	30-1/8	DBA06-482-18	150	7	1,050	130 lbs.	910 lbs.	897 lbs.
3/8	36-1/8	DBA06-578-18	150	6	900	156 lbs.	936 lbs.	1,047 lbs.
3/8	48-1/8	DBA06-770-18	150	6	900	208 lbs.	1,248 lbs.	1,394 lbs.

Deformed Bar Anchors are designed for weld and bearing plates in concrete connections.

Length: Length is listed before weld. Stud diameters 3/8" and below will be approx. 1/8" shorter after welding.

TRU-WELD Deformed Bar Anchors can be made in any length above the standard minimum.

Material: Low carbon steel ASTM A496 / A1064

**Tru-Weld deformed bar anchors are manufactured to comply with material and specifications per: AWS D1.1, ASTM-A496, ASTM A1064 , and ASTM A108/A29. ** For more detailed information see: ICC-ES Evaluation Report ESR-2823

Mechanical Property Requirements	
	Type C
Tensile Strength	80,000 psi min. (552 MPa)
Yield Strength (0.5% offset)	70,000 psi min. (485 MPa)

Type "C" Studs are cold-worked deformed steel bars manufactured in accordance with specification ASTM A496 having a nominal diameter equivalent to the diameter of a plain wire having the same weight per foot as the deformed wire. ASTM A496 specifies a maximum diameter of 0.628 in. (16mm). Any bar supplied above that diameter must have the same physical characteristics regarding deformations as required by ASTM A496.

CHUCK PART #	FOOT PART #	GRIP PART #	FERRULE FOOT PLATE (DUAL LEG)
CN-037	B-1C	GC-037 (Standard Duty)	QN-037 (Standard Duty)
	B-1C	GC-050 (Heavy Duty)	QN-050 (Heavy Duty)

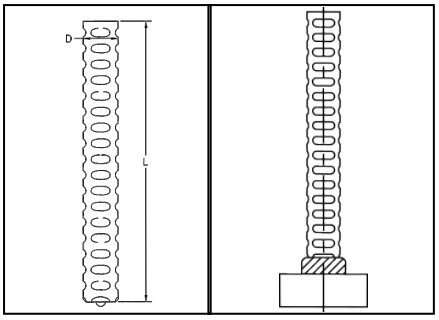

DEFORMED BAR ANCHORS

TYPE DBA STUD

NO THREAD – FULL WELD BASE

TYPE F FERRULE SUPPLIED

WELD STUD SPECIFICATIONS			WELD STUD PACKAGING			WELD STUD WEIGHTS		
D Diameter	**L** Length	**TRU-WELD** Part Number	**Pieces Per Box**	**Boxes Per Pallet**	**Pieces Per Pallet**	**Box Weight**	**Pallet Weight**	**1,000 Piece Weight**
1/2	8-1/8	DBA08-130-18	100	18	1,800	44 lbs.	792 lbs.	451 lbs.
1/2	10-1/8	DBA08-162-18	100	18	1,800	54 lbs.	972 lbs.	529 lbs.
1/2	12-1/8	DBA08-194-18	100	18	1,800	67 lbs.	1,206 lbs.	670 lbs.
1/2	18-1/8	DBA08-290-18	100	12	1,200	98 lbs.	1,176 lbs.	972 lbs.
1/2	24-1/8	DBA08-386-18	100	8	800	128 lbs.	1,024 lbs.	1,292 lbs.
1/2	30-1/8	DBA08-482-18	100	7	700	160 lbs.	1,120 lbs.	1,572 lbs.
1/2	36-1/8	DBA08-578-18	100	6	600	192 lbs.	1,152 lbs.	1,879 lbs.
1/2	42-1/8	DBA08-674-18	100	6	600	222 lbs.	1,332 lbs.	2,180 lbs.
1/2	48-1/8	DBA08-770-18	100	6	600	253 lbs.	1,518 lbs.	2,502 lbs.
1/2	60-1/8	DBA08-962-18	100	3	300	314 lbs.	942 lbs.	3,140 lbs.

Deformed Bar Anchors are designed for weld and bearing plates in concrete connections.

Length: Length is listed before weld. Stud diameters 1/2" will be approx. 1/8" shorter after welding.

TRU-WELD Deformed Bar Anchors can be made in any length above the standard minimum.

Material: Low carbon steel ASTM A496 / A1064

Mechanical Property Requirements	
	Type C
Tensile Strength	80,000 psi min. (552 MPa)
Yield Strength (0.5% offset)	70,000 psi min. (485 MPa)

**Tru-Weld deformed bar anchors are manufactured to comply with material and specifications per: AWS D1.1, ASTM-A496, ASTM A1064 , and ASTM A108/A29. ** For more detailed information see: ICC-ES Evaluation Report ESR-2823

CHUCK PART #	FOOT PART #	GRIP PART #	FERRULE FOOT PLATE (DUAL LEG)
CN-050	B-1C	GC-050 (Standard Duty)	QN-050 (Standard Duty)
	B-2C	GC-062 (Heavy Duty)	QN-062 (Heavy Duty)

Type "C" Studs are cold-worked deformed steel bars manufactured in accordance with specification ASTM A496 having a nominal diameter equivalent to the diameter of a plain wire having the same weight per foot as the deformed wire. ASTM A496 specifies a maximum diameter of 0.628 in. (16mm). Any bar supplied above that diameter must have the same physical characteristics regarding deformations as required by ASTM A496.

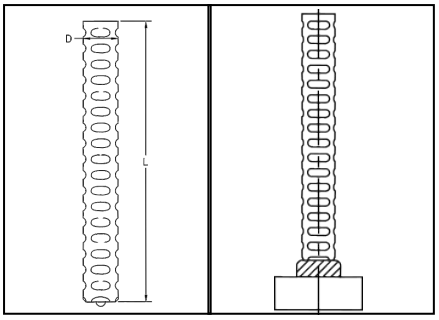

DEFORMED BAR ANCHORS

TYPE DBA STUD

NO THREAD – FULL WELD BASE

TYPE F FERRULE SUPPLIED

WELD STUD SPECIFICATIONS			WELD STUD PACKAGING			WELD STUD WEIGHTS		
D Diameter	**L** Length	**TRU-WELD** Part Number	**Pieces Per Box**	**Boxes Per Pallet**	**Pieces Per Pallet**	**Box Weight**	**Pallet Weight**	**1,000 Piece Weight**
5/8	12-3/16	DBA10-195-18	50	18	900	51 lbs.	918 lbs.	997 lbs.
5/8	18-3/16	DBA10-291-18	50	12	600	76 lbs.	912 lbs.	1,520 lbs.
5/8	24-3/16	DBA10-387-18	50	8	400	102 lbs.	816 lbs.	2,040 lbs.
5/8	30-3/16	DBA10-483-18	50	7	350	126 lbs.	882 lbs.	2,520 lbs.
5/8	36-3/16	DBA10-579-18	50	6	300	151 lbs.	906 lbs.	3,020 lbs.
5/8	42-3/16	DBA10-675-18	50	8	400	176 lbs.	1,408 lbs.	3,520 lbs.
5/8	48-3/16	DBA10-771-18	50	6	300	197 lbs.	1,182 lbs.	3,962 lbs.

Deformed Bar Anchors are designed for weld and bearing plates in concrete connections.

Length: Length is listed before weld. Stud diameters 5/8" will be approx. 3/16" shorter after welding.

TRU-WELD Deformed Bar Anchors can be made in any length above the standard minimum.

Material: Low carbon steel ASTM A496 / A1064

**Tru-Weld deformed bar anchors are manufactured to comply with material and specifications per: AWS D1.1, ASTM-A496, ASTM A1064 , and ASTM A108/A29. ** For more detailed information see: ICC-ES Evaluation Report ESR-2823

CHUCK PART #	FOOT PART #	GRIP PART #	FERRULE FOOT PLATE (DUAL LEG)
CN-062	B-2C	GC-062 (Standard Duty)	QN-062 (Standard Duty)
	B-2C	GC-075 (Heavy Duty)	QN-075 (Heavy Duty)

Mechanical Property Requirements	
	Type C
Tensile Strength	80,000 psi min. (552 MPa)
Yield Strength (0.5% offset)	70,000 psi min. (485 MPa)

Type C Studs are cold-worked deformed steel bars manufactured in accordance with specification ASTM A496 having a nominal diameter equivalent to the diameter of a plain wire having the same weight per foot as the deformed wire. ASTM A496 specifies a maximum diameter of 0.628 in. (16mm). Any bar supplied above that diameter must have the same physical characteristics regarding deformations as required by ASTM A496.

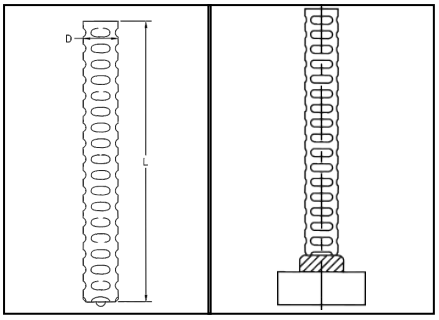

DEFORMED BAR ANCHORS

TYPE DBA STUD

NO THREAD – FULL WELD BASE

TYPE F FERRULE SUPPLIED

WELD STUD SPECIFICATIONS			WELD STUD PACKAGING			WELD STUD WEIGHTS		
D Diameter	**L** Length	**TRU-WELD** Part Number	**Pieces Per Box**	**Boxes Per Pallet**	**Pieces Per Pallet**	**Box Weight**	**Pallet Weight**	**1,000 Piece Weight**
3/4	12-3/16	DBA12-195-18	40	18	720	60 lbs.	1,080 lbs.	1,525 lbs.
3/4	18-3/16	DBA12-291-18	40	12	480	87 lbs.	1,044 lbs.	2,175 lbs.
3/4	24-3/16	DBA12-387-18	40	8	320	115 lbs.	920 lbs.	2,875 lbs.
3/4	30-3/16	DBA12-483-18	40	6	240	145 lbs.	870 lbs.	3,625 lbs.
3/4	36-3/16	DBA12-579-18	40	6	240	175 lbs.	1,050 lbs.	4,375 lbs.
3/4	42-3/16	DBA12-675-18	40	6	240	205 lbs.	1,230 lbs.	5,125 lbs.
3/4	48-3/16	DBA12-771-18	40	6	240	228 lbs.	1,368 lbs.	5,690 lbs.

Deformed Bar Anchors are designed for weld and bearing plates in concrete connections.

Length: Length is listed before weld. Stud diameters 3/4" will be approx. 3/16" shorter after welding.

TRU-WELD Deformed Bar Anchors can be made in any length above the standard minimum.

Material: Low carbon steel ASTM A496 / A1064

**Tru-Weld deformed bar anchors are manufactured to comply with material and specifications per: AWS D1.1, ASTM-A496, ASTM A1064 , and ASTM A108/ A29. ** For more detailed information see: ICC-ES Evaluation Report ESR-2823

CHUCK PART #	FOOT PART #	GRIP PART #	FERRULE FOOT PLATE (DUAL LEG)
CN-075	B-2C	GC-075	QN-075

Mechanical Property Requirements	
	Type C
Tensile Strength	80,000 psi min. (552 MPa)
Yield Strength (0.5% offset)	70,000 psi min. (485 MPa)

Type "C" Studs are cold-worked deformed steel bars manufactured in accordance with specification ASTM A496 having a nominal diameter equivalent to the diameter of a plain wire having the same weight per foot as the deformed wire. ASTM A496 specifies a maximum diameter of 0.628 in. (16mm). Any bar supplied above that diameter must have the same physical characteristics regarding deformations as required by ASTM A496.

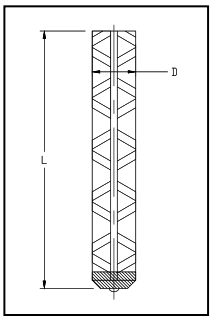

A706 Stud Weldable Rebar

TYPE **A706** STUD
TYPE P/PV FERRULE SUPPIED

WELD STUD SPECIFICATIONS			WELD STUD PACKAGING			WELD STUD WEIGHTS		
D Diameter	**L** Length	**TRU-WELD** Part Number	**Pieces Per Box**	**Boxes Per Pallet**	**Pieces Per Pallet**	**Box Weight**	**Pallet Weight**	**1,000 Piece Weight**
1/2	12-1/8	SWR08-194-11	1,000	1	1,000	674 lbs.	674 lbs.	674 lbs.
1/2	18-1/8	SWR08-290-11	1,000	1	1,000	1,008 lbs.	1,008 lbs.	1,008 lbs.
1/2	24-1/8	SWR08-386-11	750	1	750	1,016 lbs.	1,016 lbs.	1,016 lbs.
1/2	30-1/8	SWR08-482-11	600	1	600	1,006 lbs.	1,006 lbs.	1,006 lbs.
1/2	36-1/8	SWR08-578-11	100	6	600	201 lbs.	1,206 lbs.	2,010 lbs.
1/2	48-1/8	SWR08-770-11	100	6	600	264 lbs.	1,584 lbs.	2,640 lbs.
5/8	18-3/16	SWR10-291-11	1,000	1	1,000	1,549 lbs.	1,549 lbs.	1,549 lbs.
5/8	24-3/16	SWR10-387-11	750	1	750	1,555 lbs.	1,555 lbs.	1,555 lbs.
5/8	30-3/16	SWR10-483-11	500	1	500	1,299 lbs.	1,299 lbs.	1,299 lbs.
5/8	36-3/16	SWR10-579-11	50	1	50	156 lbs.	156 lbs.	156 lbs.
5/8	48-3/16	SWR10-771-11	50	6	300	209 lbs.	1,254 lbs.	4,180 lbs.
3/4	18-3/16	SWR12-291-11	800	1	800	1,821 lbs.	1,821 lbs.	1,821 lbs.
3/4	24-3/16	SWR12-387-11	750	1	750	2,272 lbs.	2,272lbs.	2,272lbs.
3/4	30-3/16	SWR12-483-11	750	1	750	2,834 lbs.	2,834 lbs.	2,834 lbs.
3/4	36-3/16	SWR12-579-11	40	9	360	180 lbs.	1,620 lbs.	4.500lbs.
3/4	48-3/16	SWR12-771-11	40	9	360	241 lbs.	2,169 lbs.	6,025 lbs.

A706 Stud Weldable Rebar are designed for weld and bearing plates in concrete connections.

Length: Length is listed before weld. Stud diameters 3/4" will be approx. 3/16" shorter after welding.
TRU-WELD A706 Stud Weldable Rebar can be made in any length above the standard minimum.

Material: Low carbon steel per ASTM A706 Grade 60

Mechanical Property Requirements	
	Grade 60 [420]
Tensile Strength	80,000 [550][A]
Yield Strength	60,000 [420]
Yield Strength	78,000 [540]
Elongation in 8 in.	
Bar Designation Nos. 4, 5, 6 [13, 16, 19]	14
Tensile strength shall not be less than 1.25 meąs the actual yield strength.	

CHUCK PART #	FOOT PART #	GRIP PART #	FERRULE FOOT PLATE (DUAL LEG)
CSW-075	B-2C	GC-075	QN-075

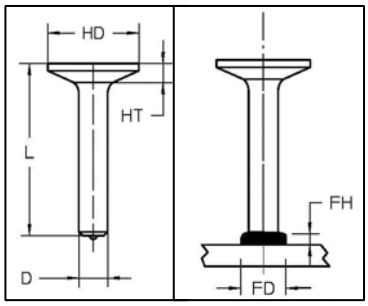

PUNCHING SHEAR RESISTOR

TYPE **PSR** STUD
HEADED CONCRETE ANCHOR – FULL WELD BASE
TYPE F FERRULE SUPPLIED

WELD STUD SPECIFICATIONS

D Diameter	**L** Length	**TRU-WELD** Part Number	**HD** Head Diameter	**HT** Head Height	**FD** Fillet Diameter	**FH** Fillet Height
3/8	3-7/16	PSR06-055-11	1.190	.260	1/2	1/8
1/2	2-5/8	PSR08-042-11	1.580	.330	11/16	5/32
5/8	3-3/4	PSR08-060-11	1.980	.400	7/8	3/16
3/4	4-3/8	PSR08-070-11	2.370	.470	1-1/16	1/4

1) Tru-Weld studs are available in any length above the standard minimum.
2) Listed Ferrule above is for the standard flat down hand position.

**Tru-Weld punching shear resistor (PSR) studs are manufactured to comply with material requirements and specifications per: AWS D1.1, ASTM-A108/A29, ASTM A1044. ** For more detailed information see: ICC-ES Evaluation Report ESR-2822

DIAMETER	FERRULE FOOT PLATE (DUAL LEG)	SIDE LOAD CHUCK	PSR Chuck
3/8	QNW-037	CSL-037L CSL-037S	CH-037-PSR
1/2	QNW-050	CSL-050L CSL-050S	CH-050-PSR
5/8	QNW-062	CSL-062L CSL-062S	N/A
3/4	QNW-075	CSL-075L CSL-075S	N/A

Mechanical Property Requirements	
Tensile Strength	65,000 psi min.
Yield Strength	51,000 psi min.
Elongation (% in 2 in.)	20% min.
Elongation (% in 5x dia.)	15% min.
Reduction of Area	50% min.

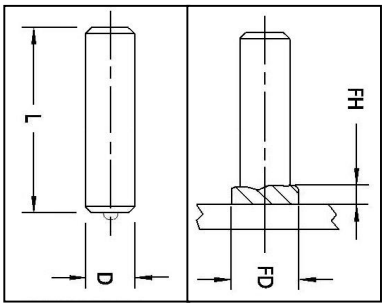

NO THREAD STUD – FULL WELD BASE

TYPE N T STUD

TYPE F FERRULE SUPPLIED

D Stud Diameter	L Length (BW)	TRU-WELD Part Number	FD Weld Fillet Diameter	FH Weld Fillet Height	Ferrule Part Number
1/4	7/8	NT04-014-11	23/64	7/64	FER04-F
5/16	7/8	NT05-014-11	7/16	7/64	FER05-F
3/8	7/8	NT06-014-11	1/2	1/8	FER06-F
7/16	1	NT07-016-11	19/32	9/64	FER07-F
1/2	1	NT08-016-11	11/16	5/32	FER08-F
5/8	1-5/16	NT10-021-11	7/8	3/16	FER10-F
3/4	1-5/16	NT12-021-11	1-1/16	1/4	FER12-F
7/8	1-9/16	NT14-025-11	1-1/8	5/16	FER14-F
1	1-7/8	NT16-030-11	1-3/8	3/8	FER16-F

NT Studs are used in all types of applications. They can be welded to a flat surface, or to the inside or outside of an angle.

Length: Length is listed before weld. Stud diameters 1/2" and below will be approx. 1/8" shorter after welding. 5/8"- 7/8" will be approx. 3/16" shorter after welding. 1" and above will be 1/4" shorter after weld. TRU-WELD NT Studs can be made in any length above the standard minimum.

Material: Low carbon steel, ASTM A29 / A108, 1010-1020. NT Studs are also available in weldable stainless steel.

Mechanical Property Requirements	
Tensile Strength	61,000 psi min.
Yield Strength	49,000 psi min.
Elongation (% in 2 in.)	17% min.
Elongation (% in 5x dia.)	14% min.
Reduction of Area	50% min.

		Light Duty Standard		Light Duty Split		Standard Combination
DIAMETER	CHUCK PART #	FOOT PART #	GRIP PART #	FOOT PART #	GRIP PART #	FOOT AND GRIP #
1/4	CN-025	B-1N	GN-025	B-1C	GC-025	QM-025
5/16	CN-031	B-1N	GN-031	B-1C	GC-031	QM-031
3/8	CN-037	B-1N	GN-050	B-1C	GC-050	QM-050
7/16	CN-043	B-1N	GN-043	B-1C	GC-043	QM-043
1/2	CN-050	B-2N	GN-062	B-2C	GC-062	QM-062
5/8	CN-062	B-2N	GN-075	B-2C	GC-075	QM-075
3/4	CN-075	B-2N	GN-075	B-2C	GC-075	QM-075
7/8	CN-087	B-3N	GN-087	B-3C	GC-087	QM-087
1	CN-100	B-3N	GN-100	B-3C	GC-100	QM-100

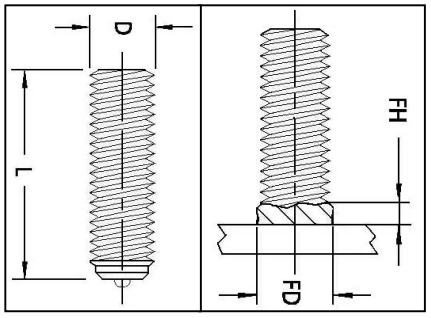

FULL THREAD STUD – FULL WELD BASE

TYPE T T STUD

TYPE F FERRULE SUPPLIED

D Stud Diameter	L Length (BW)	TRU-WELD Part Number	FD Weld Fillet Diameter	FH Weld Fillet Height	Ferrule Part Number
1/4-20	3/4	TT04-012-11	23/64	7/64	FER04-F
5/16-18	3/4	TT05-012-11	7/16	7/64	FER05-F
3/8-16	3/4	TT06-012-11	1/2	1/8	FER06-F
7/16-14	7/8	TT07-014-11	19/32	9/64	FER07-F
1/2-13	7/8	TT08-014-11	11/16	5/32	FER08-F
5/8-11	1	TT10-016-11	7/8	3/16	FER10-F
3/4-10	1-3/16	TT12-019-11	1-1/16	1/4	FER12-F
7/8-9	1-11/16	TT14-027-11	1-1/8	5/16	FER14-F
1-8	1-11/16	TT16-027-11	1-3/8	3/8	FER16-F

Mechanical Property Requirements	
Tensile Strength	61,000 psi min.
Yield Strength	49,000 psi min.
Elongation (% in 2 in.)	17% min.
Elongation (% in 5x dia.)	14% min.
Reduction of Area	50% min.

Full Thread Studs are used in all types of applications. They can be welded to a flat surface, or to the inside or outside of an angle.

Length: Length is listed before weld. Stud diameters 1/2" and below will be approx. 1/8" shorter after welding. 5/8" – 7/8" will be approx. 3/16" shorter after welding. 1" Diameter studs and above will be approx. 1/4" shorter after weld. TRU-WELD TT Studs can be made in any length above the standard minimum.

Material: Low carbon steel, ASTM A29 / A108, 1010-1020. TT Studs are also available in weldable stainless steel. Type 302 is the most commonly used. Other grades of stainless steel (except Type 303) are available when required.

		Light Duty Standard		Light Duty Split		Standard Combination
DIAMETER	CHUCK PART #	FOOT PART #	GRIP PART #	FOOT PART #	GRIP PART #	FOOT AND GRIP #
1/4	CN-025	B-1N	GN-025	B-1C	GC-025	QN-025
5/16	CN-031	B-1N	GN-031	B-1C	GC-031	QN-031
3/8	CN-037	B-1N	GN-050	B-1C	GC-050	QN-050
7/16	CN-043	B-1N	GN-043	B-1C	GC-043	QN-044
1/2	CN-050	B-1N	GN-050	B-1C	GC-050	QN-050
5/8	CN-062	B-2N	GN-062	B-2C	GC-062	QN-062
3/4	CN-075	B-2N	GN-075	B-2C	GC-075	QN-075
7/8	CN-087	B-3N	GN-087	B-3C	GC-087	QN-087
1	CN-100	B-3N	GN-100	B-3C	GC-100	QN-100

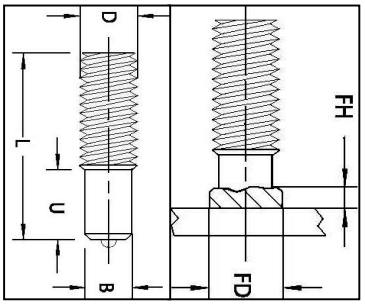

PARTIAL THREAD STUD

TYPE TP STUD

TYPE P FERRULE SUPPLIED

D Stud Diameter	L Length (BW)	TRU-WELD Part Number	B Base Diameter	U Base Length	FD Weld Fillet Diameter	FH Weld Fillet Height	Ferrule Part Number
1/4-20	3/4	TP04-012-11	.215	3/8	5/16	3/32	FER04-P
5/16-18	3/4	TP05-012-11	.275	3/8	13/32	7/64	FER05-P
3/8-16	3/4	TP06-012-11	.330	13/32	7/16	7/64	FER06-P
7/16-14	7/8	TP07-014-11	.87	7/16	1/2	1/8	FER07-P
1/2-13	7/8	TP08-014-11	.448	1/2	19/32	5/32	FER08-P
5/8-11	1	TP10-016-11	.562	5/8	3/4	3/16	FER10-P
3/4-10	1-3/16	TP12-019-11	.680	13/16	7/8	1/4	FER12-P
7/8-9	1-11/16	TP14-027-11	.798	7/8	1	5/16	FER14-P
1-8	1-11/16	TP16-027-11	.915	15/16	1-1/8	5/16	FER16-P

TP STUDS are used in all types of applications.

Length: TRU-WELD TP Studs can be made in any length above the standard minimum.

Material: Low Carbon Steel, ASTM A29 / A108, 1010-1020. TP Studs are also available in weldable stainless steel.

Mechanical Property Requirements	
Tensile Strength	61,000 psi min.
Yield Strength	49,000 psi min.
Elongation (% in 2 in.)	17% min.
Elongation (% in 5x dia.)	14% min.
Reduction of Area	50% min.

		Light Duty Standard		Light Duty Split		Standard Combination
DIAMETER	CHUCK PART #	FOOT PART #	GRIP PART #	FOOT PART #	GRIP PART #	FOOT AND GRIP #
1/4	CN-025	B-1N	GN-025	B-1C	GC-025	QN-025
5/16	CN-031	B-1N	GN-031	B-1C	GC-031	QN-031
3/8	CN-037	B-1N	GN-050	B-1C	GC-050	QN-050
7/16	CN-043	B-1N	GN-043	B-1C	GC-043	QN-044
1/2	CN-050	B-1N	GN-050	B-1C	GC-050	QN-050
5/8	CN-062	B-2N	GN-062	B-2C	GC-062	QN-062
3/4	CN-075	B-2N	GN-075	B-2C	GC-075	QN-075
7/8	CN-087	B-3N	GN-087	B-3C	GC-087	QN-087
1	CN-100	B-3N	GN-100	B-3C	GC-100	QN-100

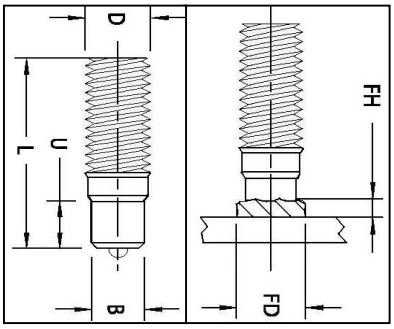

THREADED STUD – REDUCED WELD BASE

TYPE TR STUD

TYPE R FERRULE SUPPLIED

D Stud Diameter	L Length (BW)	TRU-WELD Part Number	B Base Diameter	U Base Length	FD Weld Fillet Diameter	FH Weld Fillet Height	Ferrule Part Number
3/8-16	3/4	TR06-012-11	.310	3/8	7/16	7/64	FER06-R
7/16-14	7/8	TR07-014-11	.373	3/8	1/2	1/8	FER07-R
1/2-13	7/8	TR08-014-11	.435	7/16	19/32	9/64	FER08-R
5/8-11	1	TR10-016-11	.500	1/2	11/16	5/32	FER10-R
3/4-10	1-3/16	TR12-019-11	.625	5/8	7/8	3/16	FER12-R

TR Studs are used in all types of applications. They can be welded to a flat surface, or to the inside or outside of an angle.

Length: Length is listed before weld. Stud diameters 1/2" and below will be approx. 1/8" shorter after welding. 5/8" – 3/4" will be approx. 3/16" shorter after welding.

TRU-WELD TR Studs can be made in any length above the standard minimum.

Material: Low carbon steel, ASTM A29 / A108, 1010-1020. TR Studs are also available in weldable stainless steel. Type 302 is the most commonly used. Other grades of stainless steel (except Type 303) are available when required

Mechanical Property Requirements	
Tensile Strength	61,000 psi min.
Yield Strength	49,000 psi min.
Elongation (% in 2 in.)	17% min.
Elongation (% in 5x dia.)	14% min.
Reduction of Area	50% min.

		Light Duty Standard		Light Duty Split		Standard Combination
DIAMETER	CHUCK PART #	FOOT PART #	GRIP PART #	FOOT PART #	GRIP PART #	FOOT AND GRIP #
3/8	CN-037	B-1N	GN-037	B-1C	GC-037	QN-037
7/16	CN-043	B-1N	GN-043	B-1C	GC-043	QN-044
1/2	CN-050	B-1N	GN-050	B-1C	GC-050	QN-050
5/8	CN-062	B-2N	GN-062	B-2C	GC-062	QN-062
3/4	CN-075	B-2N	GN-075	B-2C	GC-075	QN-075

COLLAR STUD

TYPE CS STUD

THREADED TO COLLAR– PITCH DIAMETER WELD BASE

TYPE C FERRULE SUPPLIED

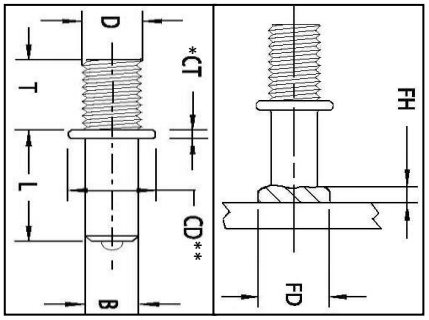

D Thread Diameter	T Thread Length	TRU-WELD Part Number	B Base Diameter	L Stud Length	FD Weld Fillet Diameter	FH Weld Fillet Height	Ferrule Part Number
1/4-20	1/4	CS03-008-11-04-004	.215	1/2	23/64	7/64	FER04-C
5/16-18	3/8	CS04-008-11-05-006	.275	1/2	7/16	7/64	FER05-C
3/8-16	3/8	CS05-008-11-06-006	.330	1/2	1/2	1/8	FER06-C
1/2-13	3/8	CS07-009-11-08-006	.448	9/16	11/16	5/32	FER08-C

Collar Studs are used in all types of applications. They can be welded to a flat surface, or on the inside or outside of an angle.
Length: Length is listed before weld. Stud diameters 1/2" and below will be approx. 1/8" shorter after welding.
TRU-WELD Collar Studs can be made in any length above the standard minimum.
***Collar Thickness:** Collar Thickness is standard for all sizes ranging from 1/4-20 to 1/2-13, special sizes can be accommodated upon customer request.
****Collar Diameter:** Collar Diameter is standard for all sizes ranging from 1/4-20 to 1/2-13, special sizes can be accommodated upon customer request.
Material: Low carbon steel, ASTM A29 / A108, 1010-1020. Collar Studs are also available in weldable stainless steel. Type 302 is the most commonly used. Other grades of stainless steel (except Type 303) are available when required.

Mechanical Property Requirements	
Tensile Strength	61,000 psi min.
Yield Strength	49,000 psi min.
Elongation (% in 2 in.)	17% min.
Elongation (% in 5x dia.)	14% min.
Reduction of Area	50% min.

		Light Duty Standard		Light Duty Split		Standard Combination
THREAD DIAMETER	CHUCK PART #	FOOT PART #	GRIP PART #	FOOT PART #	GRIP PART #	FOOT AND GRIP #
1/4"	CN-025	B-2N	GN-062	B-2C	GC-062	QN-062
5/16"	CN-031	B-2N	GN-062	B-2C	GC-062	QN-062
3/8"	CN-037	B-2N	GN-062	B-2C	GC-062	QN-062
1/2"	CN-050	B-2N	GN-075	B-2C	GC-075	QN-075

CD STUD WELDING MATERIAL CAPABILITIES

BASE MATERIAL	STUD MATERIAL			
	MILD STEEL; 1010 - 1030	STAINLESS STEEL 302/304/305	ALUMINUM 1100/5086/6061	BRASS 70-30/65-35
MILD STEEL: 1006-1030	EXCELLENT	EXCELLENT	NA	EXCELLENT
MEDIUM CARBON STEEL: 1030-1050	GOOD	GOOD	NA	GOOD
GALVANIZED SHEET DUCT OR DECKING	EXCELLENT	EXCELLENT	NA	NA
STRUCTURAL STEEL	EXCELLENT	EXCELLENT	NA	EXCELLENT
STAINLESS STEEL: 405,410,430, AND 300 SERIES (EXCL. 303)	EXCELLENT	EXCELLENT	NA	EXCELLENT
LEAD-FREE BRASS, ELECTROLYTIC COPPER, LEAD-FREE ROLLED COPPER	EXCELLENT	EXCELLENT	NA	EXCELLENT
MOST ALUMINUM ALLOYS OF THE 1000,3000,5000, AND 6000 SERIES 1	NA	NA	EXCELLENT	NA
DIE-CAST ZINC ALLOYS	GOOD	GOOD	EXCELLENT	GOOD

1) OTHER MATERIALS, SUCH AS 7000 SERIES ALUMINUM, TITANIUM ALLOYS, INCONEL, ETC. CAN BE WELDED UNDER SPECIFIED CONDITIONS.
2) GOOD – GENERALLY FULL STRENGTH RESULTS, DEPENDING ON THE COMBINATION OF STUD SIZE AND BASE METAL.

STANDARD LOAD CAPACITIES

STUD MATERIAL	STUD SIZE	MAX. FASTENING TORQUE (INCH/LBS,)	ULTIMATE TENSILE LOAD (LBS.)	MAX. SHEAR LOAD (LBS.)
LOW-CARBON COPPER FLASHED STEEL	6-32	6.0	500	375
	8-32	12.0	765	575
	10-24	14.0	960	720
	1/4-20	43.0	1,750	1,300
	5/16-18	72.0	2,900	2,200
	3/8-16	106.0	4,300	3,250
STAINLES STEEL: 304	6-32	10.0	790	590
	8-32	20.0	1,260	940
	10-24	23.0	1,530	1,150
	1/4-20	75.0	2,880	2,160
	5/16-18	126.0	3,750	5,350
	3/8-16	186.0	4,850	7,150
ALUMINUM ALLOY: 1100	6-32	2.5	200	125
	8-32	5.0	295	185
	10-24	6.5	380	235
	1/4-20	21.5	670	415
	5/16-18	36.0	1,125	695
	3/8-16	53.0	1,660	1,000
ALUMINUM ALLOY: 5086	6-32	3.5	375	235
	8-32	7.5	585	365
	10-24	10.0	735	460
	1/4-20	32.5	1,360	850
	5/16-18	54.5	2,300	1,400
	3/8-16	81.0	3,400	2,100
BRASS: 70-30, 65-35	6-32	8.0	600	390
	8-32	16.0	860	560
	10-24	18.5	1,040	680
	1/4-20	61.0	1,950	1,275
	5/16-18	102.0	3,280	2,140
	3/8-16	150.0	4,800	3,160

*MAXIMUM FASTENING TORQUE SHOULD DEVELOP FASTENER TENSION TO SLIGHTLY LESS THAN YIELD POINT.

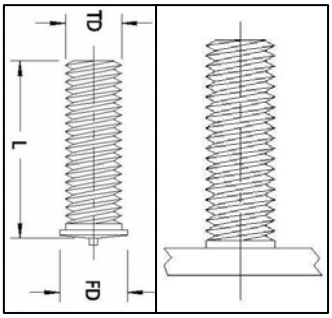

TYPE CD STUD

FULLY THREADED CAPACITOR DISCHARGE STUD – FLANGED
NO FERRULE NEEDED

WELD STUD SPECIFICATIONS			
TD Diameter and Thread Pitch	**L** Min. Length before weld	**TRU-WELD** Part Number	**FD** Flange Diameter
#4-40	.250	CDEC-004-541	.187
#6-32	.250	CDGC-004-541	.218
#8-32	.250	CDIC-004-541	.250
#10-32	.250	CDKF-004-541	.250
#10-24	.250	CDKC-004-541	.250
1/4-20	.375	CD04-006-541	.312
5/16-18	.500	CD05-008-541	.375
3/8-16	.500	CD06-008-541	.437
CD STUDS ARE AVAILABLE IN VARIOUS LENGTHS, DIAMETERS, AND MATERIALS			

PART NUMBERING CODES (CD STUDS)

PREFIX (IST FOUR DIGITS OR CHARACTERS)

CDEC = #4
CDGC = #6
CDIC = #8
CDKC= #10
CD04 = 1/4
CD05 = 5/16
CD06 = 3/8

SUFFIX (LAST THREE DIGITS)

FLANGE/NON-FLANGE (5 OR 6)
TIP/NO TIP (4 OR 0)
MATERIAL (1, 2, 3)
1 – MILD STEEL
2 – STAINLESS STEEL
3 - ALUMINUM

MATERIAL
MILD STEEL, STAINLESS STEEL, ALUMINUM, BRASS

PLATING
ALL MILD STEEL STUDS ARE COPPER PLATING (NICKEL PLATING AVAILABLE UPON REQUEST

ANNEALING
ALL STUDS ARE ANNEALED WHERE REQUIRED

ESTIMATED WEIGHTS OF THREADED CD STUDS IN POUNDS PER 1000 PIECES						
LENGTH	**#4-40**	**#6-32**	**#8-32**	**#10-24**	**1/4-20**	**5/16-18**
1/4	.69	1.00	1.39	1.79	3.08	4.90
3/8	.94	1.38	1.93	2.50	4.37	6.98
1/2	1.18	1.76	2.49	3.21	5.66	9.06
5/8	1.43	2.13	3.04	3.93	6.95	11.13
3/4	1.67	2.51	3.60	4.64	8.24	13.21
7/8	1.92	2.89	4.15	5.35	9.52	15.29
1	2.16	3.26	4.71	6.07	10.81	17.36
1-1/4	2.65	4.02	5.82	7.50	13.39	21.52
1-1/2	3.15	4.77	6.93	8.92	15.96	25.67
1-3/4	3.64	5.52	8.04	10.35	18.54	29.83

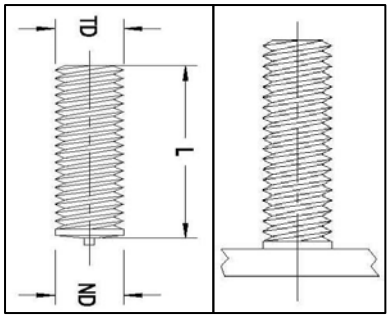

TYPE CD STUD

FULLY THREADED CAPACITOR DISCHARGE STUD – NON-FLANGED
NO FERRULE NEEDED

WELD STUD SPECIFICATIONS			
TD Diameter and Thread Pitch	**L** Min. Length before weld	**TRU-WELD** Part Number	**ND** Nominal Diameter
#4-40	.250	CDEC-004-641	.112
#6-32	.250	CDGC-004-641	.138
#8-32	.250	CDIC-004-641	.164
#10-32	.250	CDKF-004-641	.190
#10-24	.250	CDKC-004-641	.190
1/4-20	.375	CD04-006-641	.250
5/16-18	.500	CD05-008-641	.312
3/8-16	.500	CD06-008-641	.375
CD STUDS ARE AVAILABLE IN VARIOUS LENGTHS, DIAMETERS, AND MATERIALS			

PART NUMBERING CODES (CD STUDS)

PREFIX (1ST FOUR DIGITS OR CHARACTERS)

CDEC = #4
CDGC = #6
CDIC = #8
CDKC= #10
CD04 = 1/4
CD05 = 5/16
CD06 = 3/8

SUFFIX (LAST THREE DIGITS)

FLANGE/NON-FLANGE (5 OR 6)
TIP/NO TIP (4 OR 0)
MATERIAL (1, 2, 3)
- 1 – MILD STEEL
- 2 – STAINLESS STEEL
- 3 - ALUMINUM

MATERIAL
MILD STEEL, STAINLESS STEEL, ALUMINUM, BRASS

PLATING
ALL MILD STEEL STUDS ARE COPPER PLATING (NICKEL PLATING AVAILABLE UPON REQUEST)

ANNEALING
ALL STUDS ARE ANNEALED WHERE REQUIRED

ESTIMATED WEIGHTS OF THREADED CD STUDS IN POUNDS PER 1000 PIECES						
LENGTH	**#4-40**	**#6-32**	**#8-32**	**#10-24**	**1/4-20**	**5/16-18**
1/4	.69	1.00	1.39	1.79	3.08	4.90
3/8	.94	1.38	1.93	2.50	4.37	6.98
1/2	1.18	1.76	2.49	3.21	5.66	9.06
5/8	1.43	2.13	3.04	3.93	6.95	11.13
3/4	1.67	2.51	3.60	4.64	8.24	13.21
7/8	1.92	2.89	4.15	5.35	9.52	15.29
1	2.16	3.26	4.71	6.07	10.81	17.36
1-1/4	2.65	4.02	5.82	7.50	13.39	21.52
1-1/2	3.15	4.77	6.93	8.92	15.96	25.67
1-3/4	3.64	5.52	8.04	10.35	18.54	29.83

STANDARD FERRULES

SUPPLIED WITH TRU-WELD STUDS

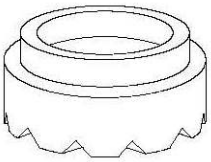

F_1
(Standard Duty)

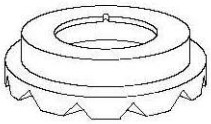

C
(Collar Stud)

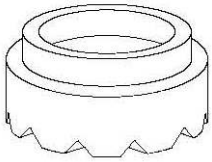

FHD
(Heavy Duty)

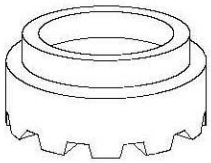

TD
(Thru Deck)

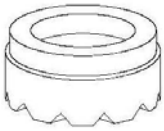

P
(Pitch Diameter Stud)

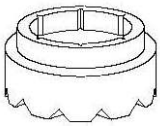

R
(Reduced Base)

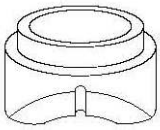

A_2
(Angle Ferrule)

THE TRU-WELD FERRULE (ARC SHIELD) IS SPECIALLY DESIGNED TO WITHSTAND HEAT SHOCK AS WELL AS REASONABLY HIGH TEMPERATURES WITHOUT MELTING OR BREAKING. THE TRU-WELD FERRULE COMPLIMENTS THE UNIFORM FLUX LOAD TO AFFECT A TOP QUALITY WELD.

SPECIAL FERRULES ARE ALSO AVAILABLE UPON REQUEST.

1) THE "F" FERRULE IS ALSO AVAILABLE IN THE LOW PROFILE VERSIONS.

2) THE "A" FERRULE PICTURED ABOVE IS THE COMBINATION INSIDE-OUTSIDE ANGLE FERRULE. THE INSIDE-ONLY AND OUTSIDE-ONLY FERRULES ARE ALSO STANDARD STOCK ITEMS.

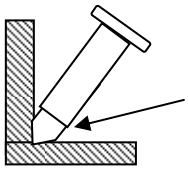

INSIDE ANGLE

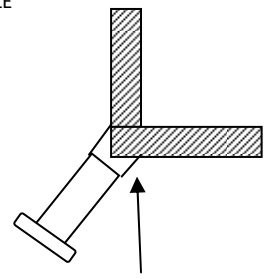

OUTSIDE ANGLE

STANDARD FERRULES

TYPE	NOMINAL SIZE	TRU-WELD PART NUMBER	D	H	G	E
F	3/16	FER03-F	.390	.390 or .250	.281	.156
	1/4	FER04-F	.455	.390 or .250	.380	.156
	5/16	FER05-F	.578	.390	.445	.156
	3/8	FER06-F	.640	.390	.505	.156
	7/16	FER07-F	.703	.422	.585	.188
	1/2	FER08-F	.795	.438	.650	.188
	5/8	FER10-F	1.030	.516	.785	.188
	3/4	FER12-F	1.218	.656	1.030	.188
	7/8	FER14-F	1.406	.732	1.210	.188
	1	FER16-F	1.610	.820	1.406	.188
FHD	1/4	FER04-FHD	.645	.390	.515	.150
	3/8	FER06-FHD	.800	.400	.645	.150
	1/2	FER08-FHD	.875	.455	.785	.185
	5/8	FER10-FHD	1.230	.520	1.035	.185
C	1/4	FER04-C	.875	.250	.785	.125
	5/16	FER05-C	.875	.250	.785	.125
	3/8	FER06-C	.875	.250	.785	.125
	1/2	FER08-C	1.203	.281	1.045	.156
P	1/4	FER04-P	.455	.250	.380	.125
	5/16	FER05-P	.535	.250	.445	.125
	3/8	FER06-P	.595	.265	.505	.125
	7/16	FER07-P	.675	.329	.585	.156
	1/2	FER08-P	.740	.362	.650	.156
	5/8	FER10-P	.905	.433	.785	.156
	3/4	FER12-P	1.150	.526	1.030	.187
	7/8	FER14-P	1.330	.593	1.203	.187
	1	FER16-P	1.526	.661	1.406	.187
R	3/8	FER06-R	.595	.250	.505	.125
	7/16	FER07-R	.675	.250	.585	.125
	1/2	FER08-R	.740	.281	.650	.156
	5/8	FER10-R	.875	.281	.785	.156
	3/4	FER12-R	1.030	.375	.921	.187
TD	1/2	FER08-TD	.800	.450	.645	.185
	5/8	FER10-TD	1.015	.525	.775	.185
	3/4	FER12-TD	1.335	.600	1.210	.185
	7/8	FER14-TD	1.528	.666	1.406	.200
A	1/4	FER04-A	.455	.500	.380	.156
	3/8	FER06-A	.640	.480	.505	.156
	1/2	FER08-A	.795	.688	.650	.188
	5/8	FER10-A	1.030	.875	.785	.188
	3/4	FER12-A	1.218	.875	1.030	.188

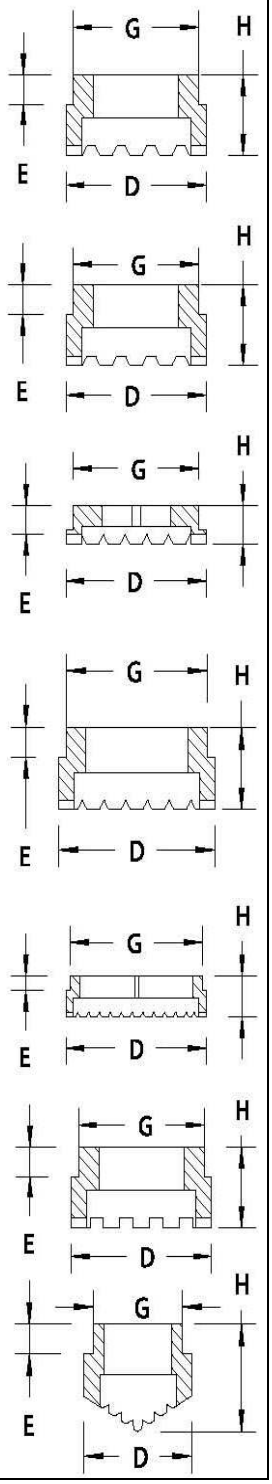

Concrete Anchor - Shipping Weight Chart

Stud Diameter	Stud Length	Lbs. Per 1000	Pieces Per Box	Pounds Per Box	Pieces Per Pallet	Pounds Per Pallet
1/4	1-1/8	22	2,000	47	54,000	1,269
	2-11/16	43	1,000	43	27,000	1,161
	3-1/8	49	1,000	49	27,000	1,323
	4-1/8	63	600	38	16,200	1,026
3/8	1-1/4	67	1,000	67	27,000	1,809
	1-3/8	70	1,000	70	27,000	1,890
	1-5/8	79	1,000	79	27,000	2,133
	2-1/8	93	700	65	18,900	1,758
	2-5/8	108	600	64	16,200	1,728
	3-1/8	124	500	62	13,500	1,674
	4-1/8	154	350	54	9,450	1,458
	5-1/8	183	300	55	8,100	1,485
	6-1/8	215	200	43	5,400	1,161
	8-1/8	280	125	35	3,375	945
1/2	1-1/8	113	600	68	16,200	1,836
	1-3/8	130	500	65	13,500	1,755
	1-1/2	136	500	68	13,500	1,836
	1-5/8	140	450	63	12,150	1,701
	2-1/8	167	400	67	10,800	1,809
	2-5/8	194	350	68	9,450	1,836
	3-1/8	227	300	68	8,100	1,836
	3-5/8	250	200	50	5,400	1,350
	4-1/8	280	200	56	5,400	1,512
	4-5/8	315	200	63	5400	1701
	5-1/8	333	150	50	4,050	1,350
	5-5/16	347	150	52	4,050	1,404
	6-1/8	400	125	50	3,375	1,350
	8-1/8	500	80	40	2,160	1,080
5/8	1-7/16	203	400	81	10,800	2,187
	1-11/16	237	325	77	8,775	2,079
	2-1/8	264	250	68	6,750	1,836
	2-3/16	284	250	71	6,750	1,917
	2-11/16	308	250	77	6,750	2,079
	3-3/16	350	200	70	5,400	1,890
	3-11/16	400	150	60	4,050	1,620
	4-3/16	440	150	66	4,050	1,782
	4-11/16	480	125	60	3,375	1,620
	5-3/16	530	100	53	2,700	1,431
	6-3/16	611	90	55	2,430	1,485
	6-9/16	650	80	52	2,160	1,404
	8-3/16	780	50	39	1,350	1,053
	10-3/16	970	100	97	900	873
	12-3/16	1,129	1,500	1,694	1,500	1,694

Shear Connector - Shipping Weight Chart

Stud Diameter	Stud Length	Pounds Per 1000 Pieces	Pieces Per Box	Pounds Per Box	Pieces Per Pallet	Pounds Per Pallet
3/4	2.20	355	200	71	9,600	3,408
	2-11/16	420	150	63	7,200	3,024
	3-3/16	480	125	60	6,000	2,880
	3-3/8	504	125	63	6,000	3,024
	3-11/16	540	100	54	4,800	2,592
	3-7/8	570	100	57	4,800	2,736
	4-3/16	600	100	60	4,800	2,880
	4-3/8	620	100	62	4,800	2,976
	4-11/16	667	75	50	3,600	2,400
	4-7/8	693	75	52	3,600	2,496
	5-3/16	734	60	44	2,880	2,112
	5-3/8	750	60	45	2,880	2,160
	5-11/16	800	60	48	2,880	2,304
	5-7/8	817	60	49	2,880	2,352
	6-3/16	850	60	51	2,880	2,448
	6-3/8	884	60	53	2,880	2,544
	6-11/16	914	70	64	1,890	1,728
	7-3/16	983	60	59	1,620	1,593
	8-3/16	1,080	50	54	1,350	1,458
	9-3/16	1,230	100	123	900	1,107
	10-3/16	1,370	100	137	900	1,233
7/8	3-3/16	630	100	63	2,700	1,701
	3-11/16	740	100	74	2,700	1,998
	4-3/16	800	75	60	2,025	1,620
	4-11/16	878	80	71	2,160	1,917
	5-3/16	1,000	60	60	1,620	1,620
	5-11/16	1,050	60	63	1,620	1,701
	6-3/16	1,160	50	58	1,350	1,566
	6-11/16	1,240	50	62	1,350	1,674
	7-3/16	1,311	45	59	1,215	1,593
	8-3/16	1,475	40	59	1,080	1,593
	9-3/16	1,667	1,400	2,334	1,400	2,334
	10-3/16	1,800	1,000	1,800	1,000	1,800
1	3-1/4	894	75	67	2,025	1,809
	4-1/4	1,140	50	57	1,350	1,539
	5-1/4	1,340	50	67	1,350	1,809
	6-1/4	1,575	40	63	1,080	1,701
	7-1/4	1,800	40	72	1,080	1,944
	8-1/4	2,012	85	171	765	1,539
	9-1/4	2,240	50	112	450	1,008

Estimated Weights for Threaded Studs In Pounds Per 1000 Pieces

Length	1/4"	5/16"	3/8"	7/16"	1/2"	5/8"	3/4"	7/8"
3/4	8.3	12.8	18.8	25.5	34.5			
1	11.0	17.0	25.0	34.0	46.0	70.0		
1-1/4	13.8	21.3	31.3	42.5	57.5	87.5	133.8	
1-1/2	16.5	25.5	37.5	51.0	69.0	105.0	160.5	243.8
1-3/4	19.3	29.8	43.8	59.5	80.5	122.5	187.3	284.4
2	22.0	34.0	50.0	68.0	92.0	140.0	214.0	325.0
2-1/4	24.8	38.3	56.3	76.5	103.5	157.5	240.8	365.6
2-1/2	27.5	42.5	62.5	85.0	115.0	175.0	267.5	406.3
2-3/4	30.3	46.8	68.8	93.5	126.5	192.5	294.3	446.9
3	33.0	51.0	75.0	102.0	138.0	210.0	321.0	487.5
3-1/4	35.8	55.3	81.3	110.5	149.5	227.5	347.8	528.1
3-1/2	38.5	59.5	87.5	119.0	161.0	245.0	374.5	568.8
3-3/4	41.3	63.8	93.8	127.5	172.5	262.5	401.3	609.4
4	44.0	68.0	100.0	136.0	184.0	280.0	428.0	650.0
4-1/4	46.8	72.3	106.3	144.5	195.5	297.5	454.8	690.6
4-1/2	49.5	76.5	112.5	153.0	207.0	315.0	481.5	731.3
4-3/4	52.3	80.8	118.8	161.5	218.5	332.5	508.3	771.9
5	55.0	85.0	125.0	170.0	230.0	350.0	535.0	812.5

Estimated Weights of No Thread Studs in Pounds Per 1000 Pieces

Length	3/16"	1/4"	5/16"	3/8"	7/16"	1/2"	5/8"	3/4"	7/8"
3/4	6.0	10.5	16.4	23.5	31.9	41.7			
1	8.0	14.0	21.8	31.3	42.5	55.6	86.6		
1-1/4	10.0	17.5	27.3	39.1	53.1	69.5	108.3	156.0	
1-1/2	12.0	21.0	32.7	47.0	63.8	83.4	129.9	187.2	254.0
1-3/4	14.0	24.5	38.2	54.8	74.4	97.3	151.6	218.4	297.5
2	16.0	28.0	43.6	62.6	85.0	111.2	173.2	249.6	340.0
2-1/4	18.0	31.5	49.1	70.4	95.6	125.1	194.9	280.8	382.5
2-1/2	20.0	35.0	54.5	78.3	106.3	139.0	216.5	312.0	425.0
2-3/4	22.0	38.5	60.0	86.1	116.9	152.9	238.2	343.2	467.5
3	24.0	42.0	65.4	93.9	127.5	166.8	259.8	374.4	510.0
3-1/4	26.0	45.5	70.9	101.7	138.1	180.7	281.5	405.6	552.5
3-1/2	28.0	49.0	76.3	117.4	148.8	194.7	303.1	436.8	595.0
3-3/4	30.0	52.5	81.8	125.2	159.4	208.5	324.8	468.0	637.5
4	32.0	56.0	87.2	128.6	170.0	222.4	346.4	499.2	680.0
4-1/4	34.0	59.5	92.7	133.0	180.6	236.3	368.1	530.4	722.5
4-1/2	36.0	63.0	98.1	140.9	191.3	250.2	389.7	561.6	765.0
4-3/4	38.0	66.5	103.6	148.7	201.9	264.1	411.4	592.8	807.5
5	40.0	70.0	109.0	156.5	212.5	278.0	433.0	624.0	850.0

TRU-WELD ARC Stud Gun

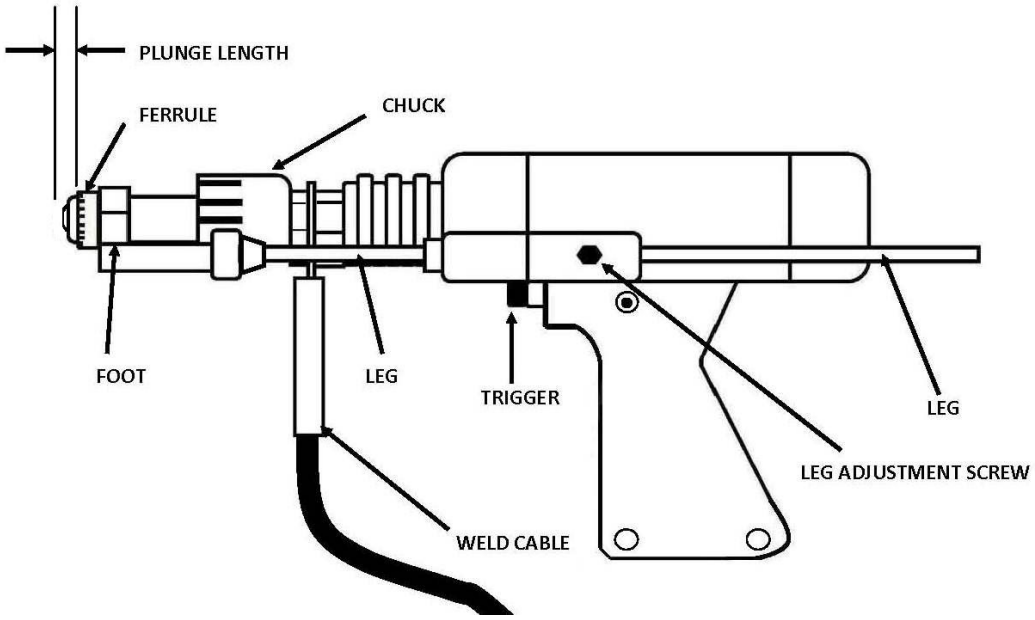

The weld stud gun consists of the body, trigger, and lift mechanism. Stud gun accessories consist of the chuck or fastener holder, and an adjustable support leg for the ferrule holder (grip). The chuck and ferrule holder are easily changed to accommodate the various diameters of studs and ferrules to be used. An adjustment for the lift of the fastener is provided on the stud gun.

The portable, pistol grip design weld gun is offered in 3 capacities;

1) Light Duty (Stud diameters - 1/8 to 3/8)
2) Medium Duty (Stud diameters - 1/8 to 5/8)
3) Heavy Duty (Stud diameters - 1/8 to 1-1/4)

THE STUD WELDING PROCESS

Drawn Arc Stud Welding

Drawn Arc Stud Welding is generally used to weld large diameter fasteners to rougher and thicker base metals. Arc studs may be almost any shape and there are literally hundreds, however, they must have one end of the fastener designed for arc welding. Mild steel, stainless steel, and aluminum are applicable materials for arc stud welding.

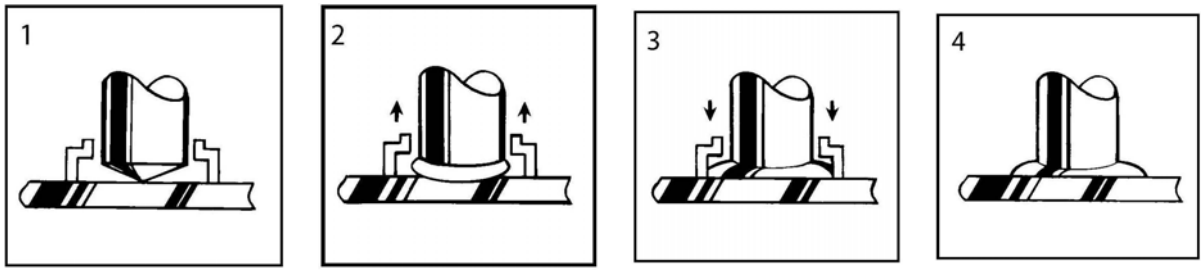

Step 1 **Step 2** **Step 3** **Step 4**

1) The weld gun is positioned over the base material and the main gun spring is partially compressed.

2) The trigger is pressed and the stud lifts off the base, drawing an arc. The arc melts the end of the weld stud and the base material below. The arc shield (ferrule) concentrates the heat below the weld stud and contains the molten metal within the weld zone.

3) The main spring plunges the weld stud down into the molten pool of metal in the base material. The cycle is completed in less than a second and the resulting weld bond develops the full strength of the fastener in the weld zone.

4) The weld gun is withdrawn from the weld stud leaving and the ferrule. The ferrule is broken away and discarded.

THE STUD WELDING PROCESS

Capacitor Discharge Stud Welding

Capacitor Discharge (CD) stud welding is generally used to weld smaller diameter fasteners to thin base metals. Since the entire weld cycle is completed in milliseconds, welds can be made without pronounced distortion, burn-through or reverse side discoloration. As long as one end of the fastener is designed for CD welding, CD studs can be manufactured in almost any shape.

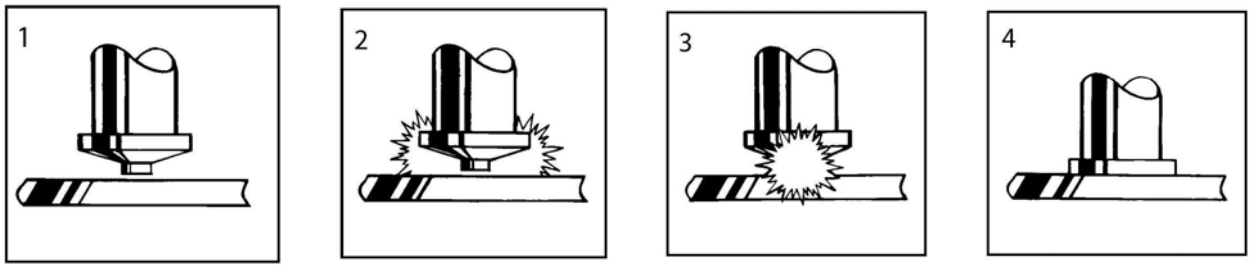

Step 1 **Step 2** **Step 3** **Step 4**

1) The weld gun and stud is positioned against the work plate. No ferrule is needed.

2) Stored energy discharged through special weld "timing" tip and the stud starts downward.

3) The stud is forced downward into the pool of molten metal.

4) Metal solidifies and weld is completed in a split second.

STUD WELDING GUIDELINES

- Keep weld studs and ferrules clean and dry
- Set the time for the appropriate weld base diameter (see chart below)
- Set the amperage for the appropriate weld base diameter (see chart below)
- Make sure the negative polarity is to the weld stud gun and ensure a good, clean ground connection
- Align accessories so they are centered and adjust legs so that 1/8” to 1/4” of the stud protrudes beyond the ferrule
- Make sure work surface is relatively clean so impurities do not affect weld
- Test the welds at the beginning of each shift or change in stud. Bend two studs 30 degrees after cooling (AWS Bend Test)
- Check burn off (1/8” – 1/4”), color (silver blue and shiny), and weld fillet (360 degree)
- Visually inspect all welds

STUD DIAMETER	TIME (Seconds)	CURRENT (Amps)
1/4	.20 - .25	350 – 450
5/16	.25 - .30	450 – 600
3/8	.33 - .40	525 – 700
7/16	.40 - .45	675 – 750
1/2	.50 - .55	750 – 925
5/8	.65 - .70	1100 – 1400
3/4	.85 - .90	1450 – 1750
7/8 (+)	1.00 – 1.20	1700 – 1950

STUD DIAMETER	STICK OUT
3/16 thru 1/2	1/8
5/8 thru 7/8	3/16
1” and over	3/16 – 1/4

TRU-WELD STUD WELDING
Stainless Steel Weld Studs



TRU-WELD offers all of our high-quality weld studs in Type 302, 304L, 316L, and 430 Stainless Steel in any length above the standard minimum.

TRU-WELD
STAINLESS STEEL WELD STUDS

- CONCRETE ANCHORS
- SHEAR CONNECTORS
- PSR STUDS
- FULL THREAD STUDS
- PARTIAL THREAD STUDS
- NO THREAD STUDS
- COLLAR STUDS
- INTERNAL THREAD STUDS
- REDUCED BASE STUDS
- KNOCK-OFF STUDS

302 Stainless - Material Characteristics

Type 302 stainless steel is a general purpose material with greater corrosion resistance to that of mild steel. Type 302 stainless steel produces very good, strong welds.

304L Stainless - Material Characteristics

High strength, excellent corrosion resistance and minimized carbon content make Types 304L stainless steel useful for applications where welding is required. For severely corrosive environments, Type 304L is preferred because of its greater immunity to intergranular corrosion. These grades are suitable for all applications specifying Type 302.

316L Stainless - Material Characteristics

Type 316 stainless steel is widely used in applications requiring corrosion resistance superior to Type 304, or good elevated temperature strength. Type 316L is used extensively for weldments where its immunity to carbide precipitation due to welding assures optimum corrosion resistance.

Contact a TRU-WELD Sales Rep for ordering details!
1-800-321-5588

TRU-WELD

460 Lake Road
Medina, Ohio 44256
(800) 321-5588
truweld@tfpcorp.com
truweldstudwelding.com



MADE IN AMERICA